IMPORTANT NOTICE: The current official version of this document is available via the Sandia National Laboratories WIPP Online Documents website. A printed copy of this document may not be the version currently in effect.

ACTIVITY/PROJECT SPECIFIC PROCEDURE

SP 12-22
CALIBRATION, USE, AND MAINTENANCE OF THE DIONEX ION CHROMATOGRAPH (IC) 3000
Revision 3

Effective Date: September 22, 2016

Author:	Jandi Knox	*Original signed by Jandi Knox*	*9/22/16*
	(printed name)	(signature)	(date)

1.0 Purpose and Scope

This procedure prescribes the Sandia National Laboratories (SNL) Waste Isolation Pilot Plant (WIPP) process for the calibration, operation, and maintenance of the Dionex IC 3000 as part of the laboratory research activities in the support of the WIPP Project.

This procedure is applicable only for the Dionex IC 3000 for the following applications: anions, carbonates, organic acids, EDTA, and transition metals. This document is concise, and is not meant to substitute for the manufacturers' instruction manuals. The user is responsible for reading and understanding the appropriate manuals (see references).

Acronyms and definitions for terms used in this procedure may be found in the Glossary located at the Sandia National Laboratories (SNL) WIPP Online Documents web site.

2.0 Implementation Actions

2.1 Safety

The activities described in this SP shall conform to the SNL Environmental Safety and Health programs (ES&H) as described in the laboratory standard operating procedure (SOP).

2.2 Responsibility

The Principal Investigator (PI), or designee, whose activities warrant the use of this procedure, is responsible for implementing the requirements of this procedure.

The PI or designee is responsible for performing the calibrations and measurements following the requirements of this procedure, documenting calibrations, and assuring that the latest revision of this document is followed.

© 2016 Sandia Corporation

2.3 Standards

The standards used for calibration and calibration checks will be prepared from primary standards. The primary standards will be commercially obtained and traceable to NIST or other nationally recognized standards, or alternatively may be prepared from ACS grade salts (i.e. NaCl). The certificates of analysis for the primary standards provided by the manufacturer will be submitted to the WIPP Records Center. The preparation of the standards shall be documented in the Scientific Notebook in accordance with NP 13-1, *Control of Samples and Standards*, and NP 20-2, *Scientific Notebooks* (see Appendix A). The standards will not be used past the expiration date listed on the container by the manufacturer. Appendix E is available for use, if desired, to document the standard preparation.

2.4 Quality Control

If the results of the calibration and QC samples are not within the acceptance/tolerance limits (described in subsequent sections), all samples shall be flagged on the data report and corrective action documented.

2.5 Corrective Action

If during calibration or calibration check, the tolerance limit cannot be met, a Corrective Action Request (CAR) will be issued to document the results and impact relative to data collection. Corrective action would include an evaluation to any data collected. Results of all activities related to the out-of-tolerance will be summarized in the CAR per the requirements in NP 16-1 *Corrective Action*.

2.6 Calibration

Calibration will be performed using at least three standards which cover the range of expected measurements. A calibration curve may be used indefinitely provided no major instrument changes have occurred (i.e. a column change), and as long as the calibration check standard passes, and if the standards used are not past their expiration dates. The calibration curve shall possess a correlation coefficient of ≥0.995 to ensure the linearity over the calibrated range (R^2). If any sample concentration exceeds the highest concentration of the calibration standards, it must be diluted and re-analyzed. Alternatively in the case that a sample is already used up, a new calibration standard to bracket the concentration of the sample will be prepared and analyzed. This standard will then be processed in the calibration method and the sample result re-processed.

2.6.1 Creating a Calibration Curve

In the Chromeleon software, in the browser click New – Method – and save as your new file name. In the tool bar, click on the yellow graph Icon QNT Editor, in this section go through each tab and fill in the pertinent information pertaining to your calibration curve. Once a Method has been set up, this may be used for subsequent analysis (see sect 2.6). See section VI in the CHROMELEON® Tutorial and User Manual Version: 6.80 for more detail on creating a calibration curve.

2.7 QC Sample Criteria

A calibration check standard will be analyzed as a sample immediately after the calibration and prior to each day of analysis if a previous calibration curve is being utilized. This calibration check standard is one of the standards used for establishing the calibration curve. The check standard will be analyzed after every ten samples, and at the end of the analytical run. The results of these standards should agree with their respective expected values within 15%. If not, the analysis will be terminated.

After the problem is corrected, re-analyze the calibration check standard. If the tolerance limit is still not met, the instrument will be re-calibrated and samples will be re-analyzed.

2.8 Instrument Start-up

1. Turn on the Detector/Chromatography Module (DC) and the Single Pump Module (SP).
2. Open the Chromeleon operation software.
3. Go to the control panel- open the Tab - Gradient Pump.
4. Check if there is enough eluent, post column reagent solution etc. needed for your application.
5. Open the prime valve, located in the SP Module and click on prime and allow priming for approximately 30 seconds. This is to remove any air bubbles in the tubing. Turn off prime and close the prime valve. Make sure to prime all eluents to be used (i.e. 9.55 mM and 42.98 mM NaOH).
6. Click on pump and allow the eluent to flow, it takes approximately 30 minutes to stabilize. The baseline can be viewed by clicking on the blue circle on the tool bar- Acquire Data. If large oscillations in the pressure are observed, re-prime the pump.
7. Turn on the suppressor (if required for your application) and set to the proper amperage, this should be on while the instrument is stabilizing.
8. While the baseline is stabilizing, go to Browser and set up the sequence for the standards and samples. In the browser you will input your sample IDs, standards, type of sample (unknown or standard), program (the method set up for your application), and the method name (see sect 2.6.1). Note: you must save this sequence or it will not run.
9. Load your samples and standards in sample vials and the appropriate caps, then load the samples into an auto sampler tray(s) – the black dot is the #1 slot in the tray. Load tray(s) in auto sampler and press Hold/Run to set tray in position for analysis.
10. Go back to Control Panel and check to see if the baseline has stabilized, if so click on the blue circle in the tool bar to Stop Acquiring Data.
11. Go back to Browser and click on Batch – Start to start the sequence/analysis. Verify that the file name is correct before clicking start. You may choose to click Ready Check first, this will indicate how much eluent is necessary for the sequence you are about to analyze. You may also choose to add the shut-down program at this time, so the run will immediately end when the analysis is complete.

2.9 Sample Analysis

1. You may view your sample in ‘real time’ by going to control panel and open the tab - status
2. Once the sample is finished, you may double click on the sample in browser, and see the results in full scale. Under the summary tab, a table will show the concentration based on your calibration curve.
3. To print a report of your analysis and calibration curve, you first must be in your run file, and click on the printer layout icon in the tool bar.

2.10 Instrument Shut-down

After the analysis is completed, do the following to shut-down the instrument:

1. Allow the eluent to run through the column for approximately 5 minutes to insure that all sample is flushed from the column.
2. In the control Panel, turn off the pump and suppressor (if was used for your application).
3. For Long Term shut down-i.e. longer than a month, you will need to turn off the power to both the DC and SP Modules. In addition, the columns and instrument tubing should be rinsed with DI water. Follow the recommendations for long term shut-down maintenance in the Dionex IC-3000 Manual.

2.11 General Requirements for each Application

2.11.1 Anions/Iodide (See Appendix A)

Column	AS23 4mm + AG23 4mm (guard column)	
Eluent	4.5 mM Na_2CO_3/0.8mM $NaHCO_3$ (Note: 9.55mM and 42.98mM NaOH eluent can also be used for this analysis)	
Flow Rate	1.2 mL/min (alternately 1.0 mL/min)	
≈ Conductivity	17-20 µS	
Suppressor	ASRS Ultra II 4mm	Set @ 25ma
Detector	Conductivity Cell	
Injection Loop	25 µL (alternately 50 uL)	
≈ Calibration Range	0-200 PPM	

2.11.2 Carbonates (See Appendix B)

Column	ICE-AS1 9mm	
Eluent	0.1mM Perchloric Acid/100mM Mannitol	
Flow Rate	0.8 mL/min	
Cation Regenerate	Tetrabutylammonium Hydroxide (TBAOH)	
Regenerate Flow Rate	5 mL/min	
≈ Conductivity	80-90 µS	
Suppressor	AMMS-ICE II	Set @ 0ma
Detector	Conductivity Cell	
Injection Loop	50 µL	
≈ Calibration Range	0-80 PPM	

2.11.3 Transition Metals (See Appendix C)

Column	CS5A 2mm + CG5A 2mm (guard column)	
Eluent	KOH/KSO_4/Formic Acid (PDCA)	
Flow Rate	0.3 mL/min	
Post Column Reagent	4-(2-pyridylazo)resorcinol (PAR)	
Post Column Flow Rate	0.15 mL/min	
Detector	Cary UV	@ 530 nm
Injection Loop	50 µL	
Knitted Reaction Coil	125 µL un-potted	
≈ Calibration Range	0-80 PPM	

Note:

1) If analyzing for Fe^{+2}/Fe^{+3} pump freshly prepared 100 mM Na_2SO_3 through the column at 0.3 mL/min for about 1 hour to remove any oxygen that may be in the column. In addition, samples prepared for Fe^{+2} will need to be preserved prior to analysis using a strong non-oxidizing acid (i.e. HCl) or with another suitable preservative such as glycolic acid.
2) When analyzing transition metals the brine ionic strength needs be below 0.2 M or you will not obtain acceptable chromatography. In addition, the standards will need to be prepared at the same ionic strength as the samples to matrix match (see section 2.3).

2.11.4 Anions/Organic Acids (See Appendix A)

Column	AS23 4mm + AG23 4mm (guard column)	
Eluent	≈10 mM NaOH to ≈43 mM NaOH gradient (Note:	
Flow Rate	1.0 mL/min	
≈ Conductivity	1-4 µS	
Suppressor	ASRS Ultra II 4mm	Set @ 120ma
Detector	Conductivity Cell	
Injection Loop	50 uL	
≈ Calibration Range	0-200 PPM	

Note: Sample preparation may be necessary to remove interferences. Devices such as phenomenex strata x filters may be considered. If these devices are needed, follow all manufacturer recommendations for preparation devices.

2.11.5 EDTA (See Appendix D)

Column	AS7 4mm + AG7 4mm (guard column)	
Eluent	100 mM Methanesulfonic Acid (MSA)	
Flow Rate	1.0 mL/min	
Detector	Electrochemical Cell with Pt electrode	Int Amp Mode
Injection Loop	50 uL	
≈ Calibration Range	0-80 PPM	

2.12 Data Collection

Hard copies of the data collection and calibration records will be stored in a scientific notebook or scientific notebook supplement. Electronic copies will be stored on the IC computer.

2.13 Maintenance

Please refer to ICS-3000 Ion Chromatography System Operator's Manual.

2.14 References

- ICS-3000 Ion Chromatography System Operator's Manual
- CHROMELEON® Tutorial and User Manual Version: 6.80

3.0 Records

The following records, generated through implementation of this procedure, shall be prepared and submitted to the WIPP Records Center in accordance with NP 17-1 (Records):

QA Record

- Scientific Notebook
- Scientific Notebook Supplement

4.0 Appendices

Appendix A: IC Schematic of Anions/Organic Acids
Appendix B: IC Schematic of Carbonates
Appendix C: IC Schematic of Transition Metals
Appendix D: IC Schematic of EDTA
Appendix E: Form SP 12-22-1, Record of Preparation of IC Derivative Calibration Standards

Appendix A
IC Schematic of Anions/Organic Acids

Anions / Organic Acids

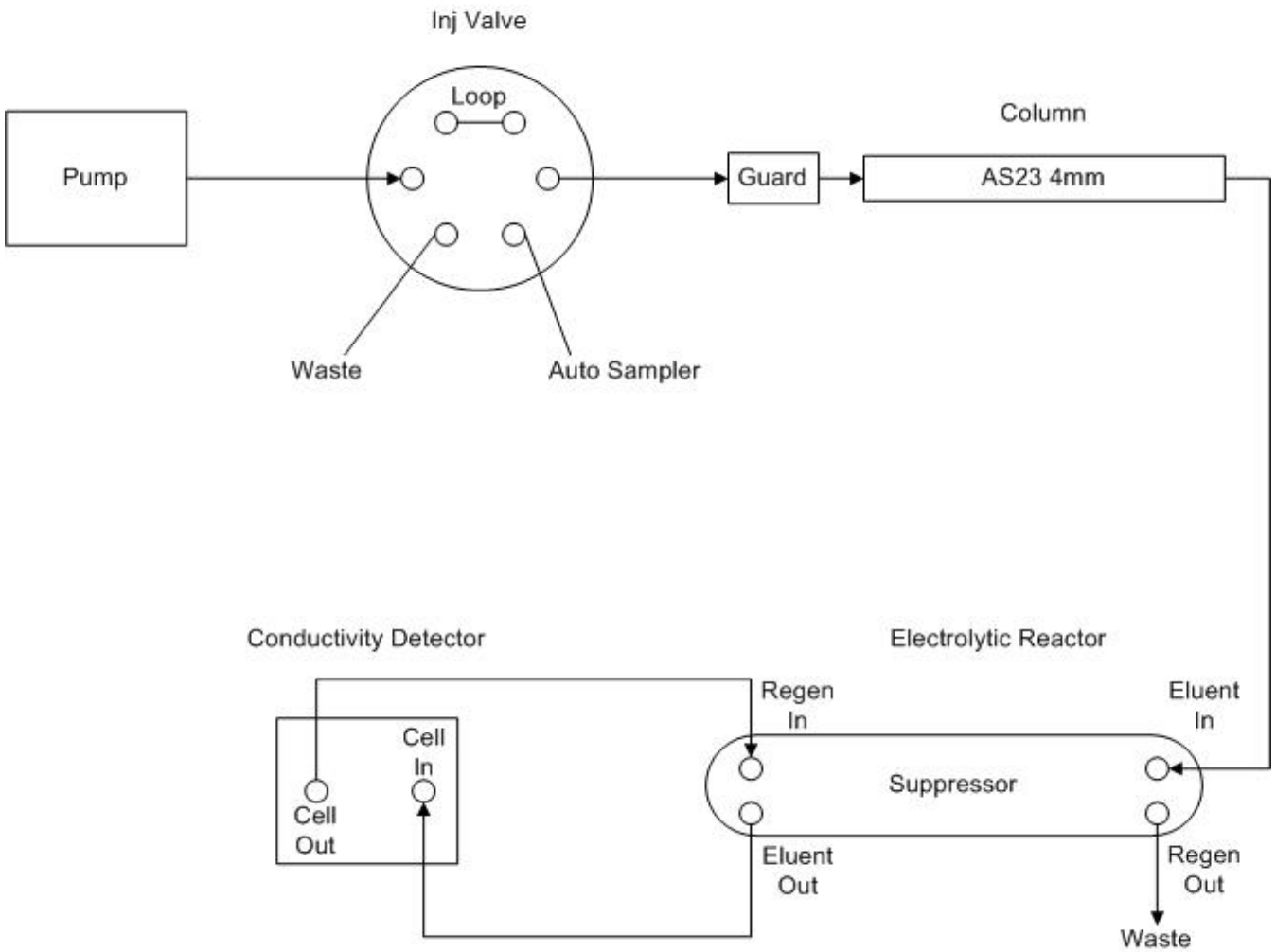

Appendix B
IC Schematic of Carbonates

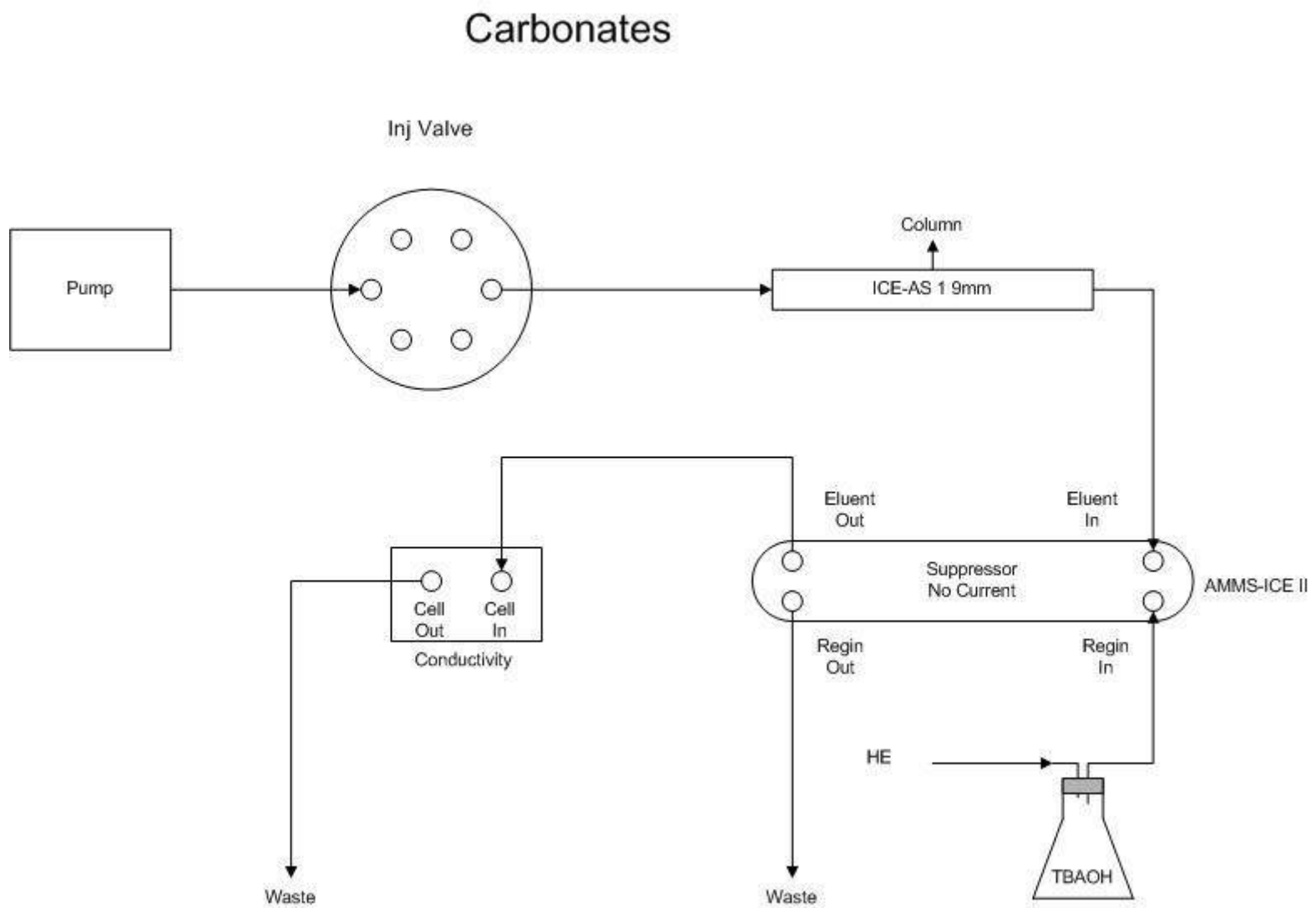

IC Schematic of Transition Metals

Transition Metals

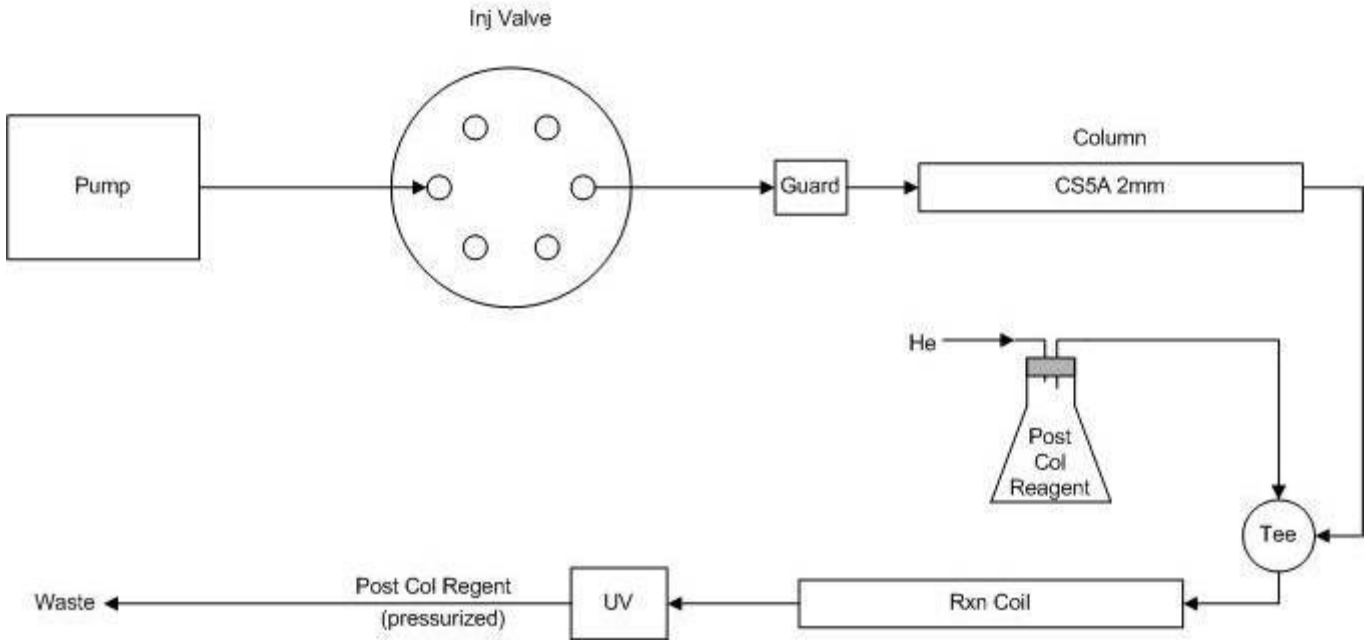

Appendix D
IC Schematic of EDTA

EDTA

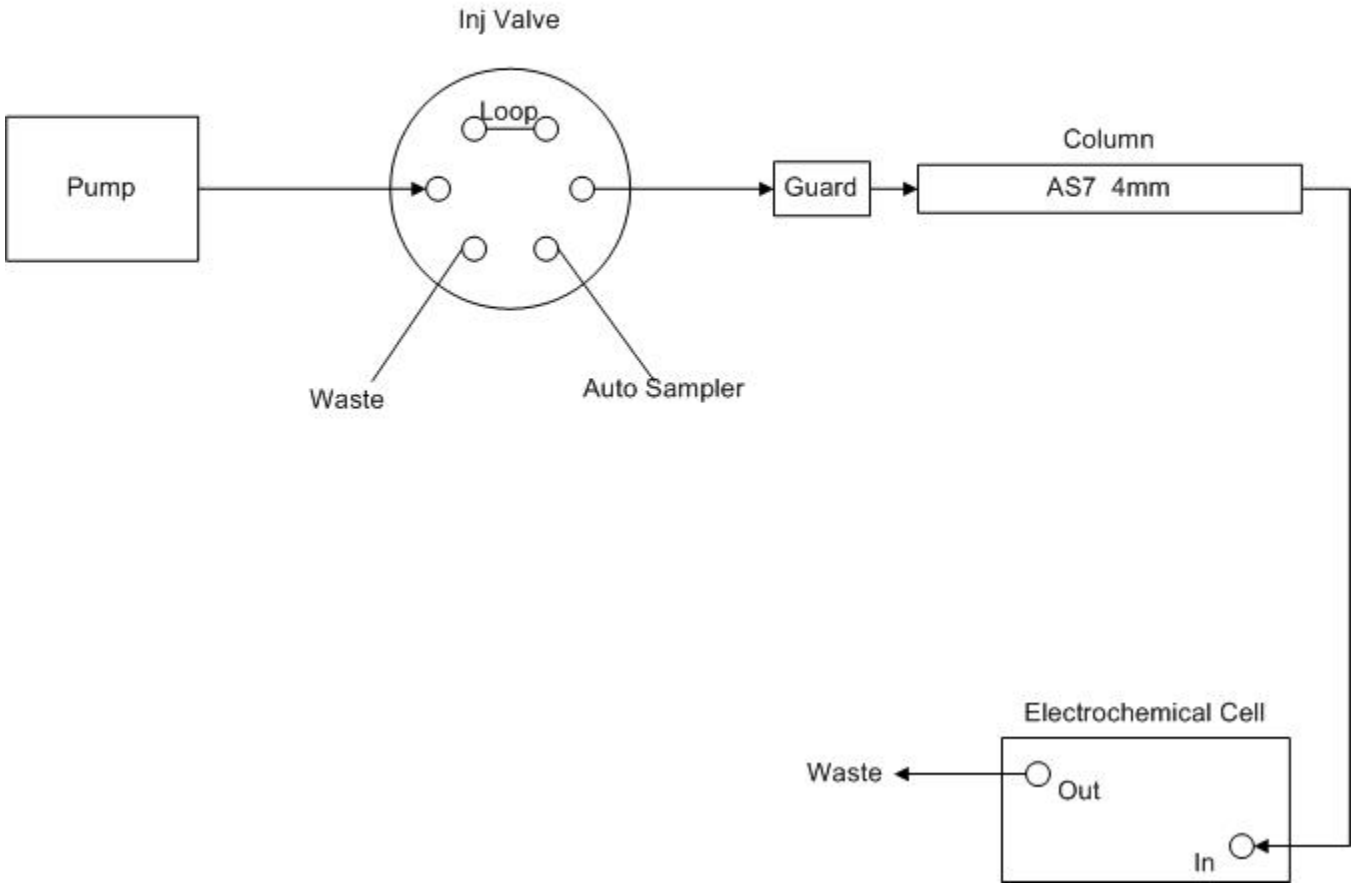

Appendix E

ACTIVITY/ PROJECT SPECIFIC PROCEDURE Sandia National Laboratories	**Record of Preparation of IC Derivative Calibration Standards**	**Form Number:** SP 12-22-1 **Page 1 of 1**

Document inserted in Scientific Notebook _____ on page _____

Analyte(s)	Volume & Concentration of Primary/Derivative Stock Standard	Final Volume mL	Final Concentration, µg/L
Standard	**Manufacturer**	**Lot #**	**Expiration Date**

Prepared by: _____

Date Prepared: _____

Expiration Date: _____

Sample Form

This work of authorship was prepared as an account of work sponsored by an agency of the United States Government. Accordingly, the United States Government retains a nonexclusive, royalty-free license to publish or reproduce the published form of this contribution, or allow others to do so for United States Government purposes. Neither Sandia Corporation, the United States Government, nor any agency thereof, nor any of their employees makes any warranty, express or implied, or assumes any legal liability or responsibility for the accuracy, completeness, or usefulness of any information, apparatus, product, or process disclosed, or represents that its use would not infringe privately-owned rights. Reference herein to any specific commercial product, process, or service by trade name, trademark, manufacturer, or otherwise does not necessarily constitute or imply its endorsement, recommendation, or favoring by Sandia Corporation, the United States Government, or any agency thereof. The views and opinions expressed herein do not necessarily state or reflect those of Sandia Corporation, the United States Government or any agency thereof.

Sandia National Laboratories is a multi-mission laboratory managed and operated by Sandia Corporation, a wholly owned subsidiary of Lockheed Martin Corporation, for the U.S. Department of Energy's National Nuclear Security Administration under contract DE-AC04-94AL85000.

Parties are allowed to download copies at no cost for internal use within your organization only provided that any copies made are true and accurate. Copies must include a statement acknowledging Sandia Corporation's authorship of the subject matter.